SUSTAINER KIT WIRING DIAGRAM W/ AUX BOARD

CAUTION: Make sure that all pot bodies are connected to ground and also to output jack shield terminal. Orient board to place 8-pin connector close to pickup selector. Trim brown/red wires (8-pin connector) short.

DRIVER POLARITY: Use polarity shown for standard bridge pickups having "negative-on-pullaway" polarity. For pickups having "positive-on-pullaway" polarity, reverse the driver wires.

BATTERY: Make sure that battery (-) wire and black wire of 10-pin connector go to same ground connection.

OPTIONAL 25K DRIVER POT: if not used cut the green cable off short on 8-pin connector and blue keep connect to ground.

GRUNGE OR OSCILLATION ISSUE: Twist orange/white (8-pin connector), and keep short and away from guitar signal wires. (may need shielding if grunge or oscillation present)

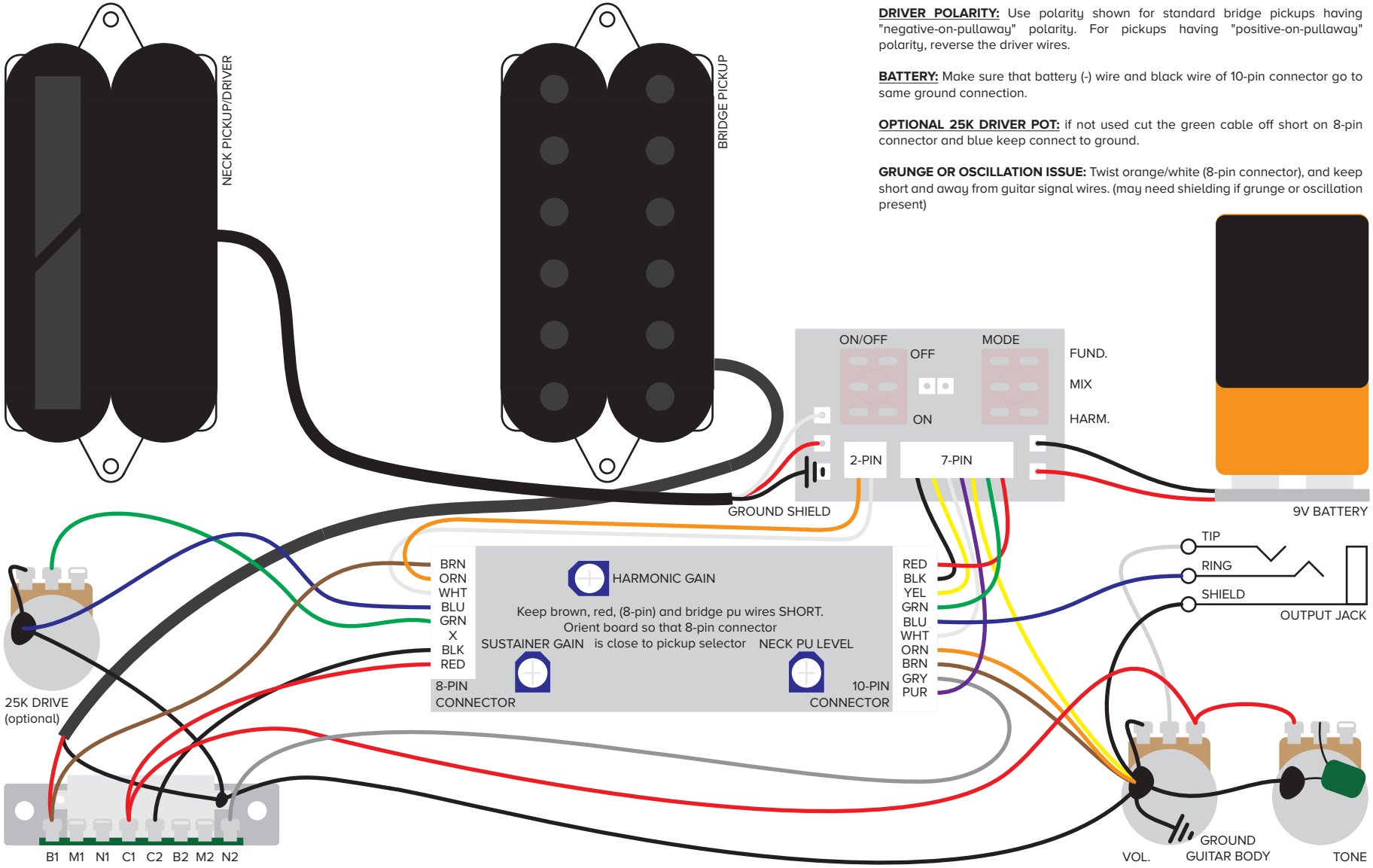

©2024 ISUSTAINER.COM